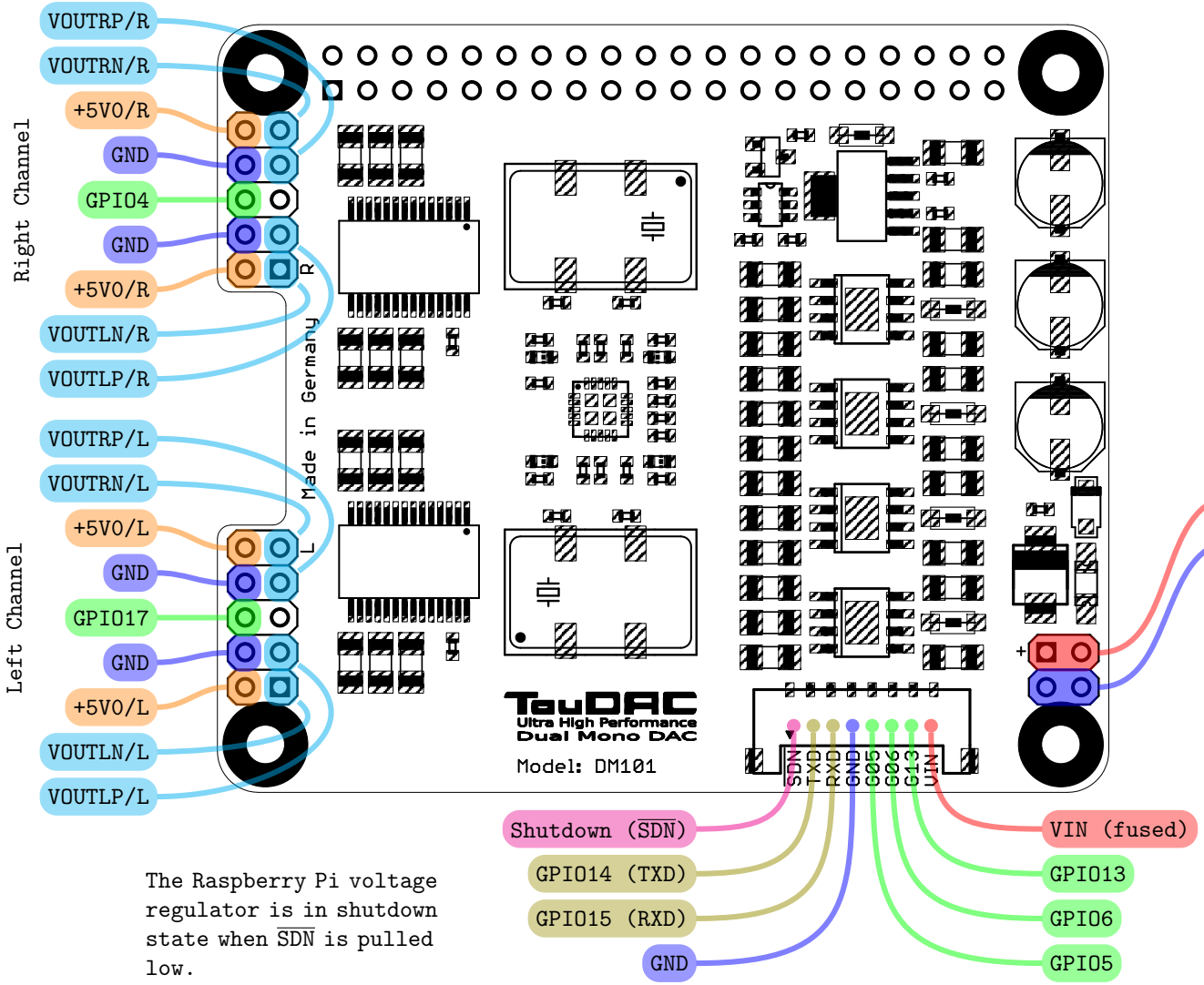

Power supply

The input voltage (VIN) should be between 6.3 and 9.1V DC. The power supply unit should be able to provide at least 1.5A.

The Raspberry Pi voltage regulator is in shutdown state when $\overline{\text{SDN}}$ is pulled low.

(optional) Control Panel
required connector: 504051-0601 (molex)

Copyright ©2017 Sergej Sawazki